MAULANA AZAD NATIONAL INSTITUTE OF TECHNOLOGY, BHOPAL

Department of Electrical Engineering

B. Tech. IV Semester Main Examination April-May -2024

Sub: Electronics Devices & Circuits (EE-223)

22113014

Max. Marks: 50 Time: 03 Hours

Note: Solve all questions else do as directed. Assume any missing data.

| | | |
|---|---|---|
| Q.1 | Choose questions for 10 marks. Questions *(i)* to *(vii)* are of 1 marks each while questions *(viii)* to *(xii)* are of 2 marks each. | |
| | (i) If capacitor $C_o$ in Fig. 1 becomes open, what effect will it have on circuit operation to the left of capacitor $C_o$? | 1 |

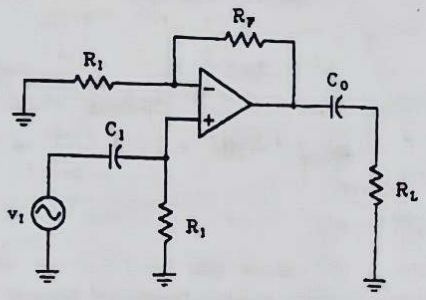


Fig. 1

| | | |
|---|---|---|
| (ii) | A MOD 12 and MOD 10 counters are cascaded and the combination is tied to a clock of 120 MHz. Estimate the output frequency. | |
| (iii) | A decoder/driver circuit requires active-HIGH outputs to drive a common-cathode 7-segment LED display? Justify the statement. | 1 |
| (iv) | Can a standard 741 op amp be used to amplify a 33-kilohertz signal if the desired voltage gain is 5 and the maximum peak output voltage swing is 11 volts? Justify your answer. | 1 |
| (v) | Justify that OP-AMP Non-Inverting amplifier is an example of voltage Series feedback topology. | 1 |
| (vi) | If zero volt is applied directly to the inverting input of an ideal op amp at the same time that -0.1 volts is applied to the noninverting input. Estimate the expected output voltage with due justification. | 1 |
| (vii) | Tabulate the OP-AMP ideal values for : ***a.*** *Bandwidth* ***b.*** *Input current* ***c.*** *Open-loop voltage gain* ***d.*** *Input impedance* ***e.*** *Lowest operating frequency* ***f.*** *Highest operating frequency* ***g.*** *Slew rate* ***h.*** *Output impedance* ***I.*** *Common-mode voltage gain* | 1 |
| (viii) | Write the simplified expression for the outputs Difference and Borrow for the Adder-Subtractor circuit shown in Fig. 2. Control input is 1 for the Difference/Borrow. | 2 |

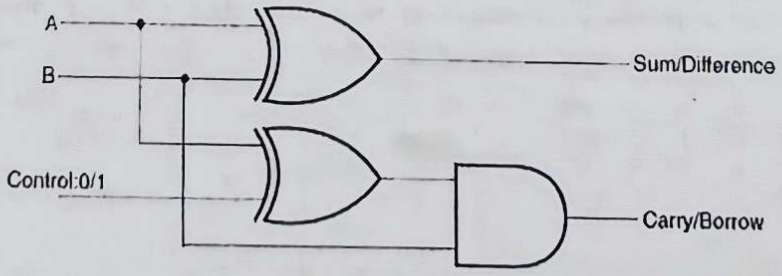


Fig. 2

| | | |
|---|---|---|
| (ix) | In feedback topologies, the amplifier and the feedback-network respectively has gain of 20000 and 0.01. Estimate the factor by which input resistance $R_{in}$, the output resistance $R_{out}$ and Bandwidth *BW* shall be modified in Voltage series and voltage shunt feedback topologies. | 2 |
| (x) | A full adder can be implemented in many ways. One of the way is to use two half adder circuits as shown in Fig. 3 below. | 2 |

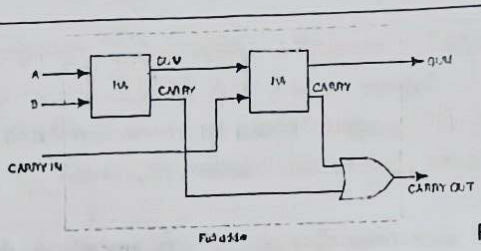


Fig. 3

Construct the function table for this arrangement and show that it implements a Full adder logic. 2

(xi) A half adder circuit has 02 inputs A &B as shown in Fig. 4. Draw the output waveform of sum (S) and carry (C).

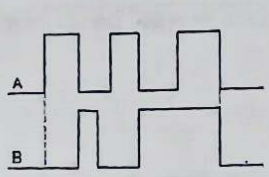


Fig. 4 2

(xii) Draw output waveform of an Op-Amp oscillator having Wein bridge with $R = 1k,\ and\ C = 1\mu F$ and Amplifier's gain *(i)* 2 and *(ii)* 3.5. The OP AMP supply voltage are $V_{CC}$ = +12 V and $V_{EE}$ = -12 V.

Q.2(a) Analyze an OP AMP Amplifier circuit shown in Fig. 5 below for following parameters: 05

*(i) Voltage Gain, (ii) Input Impedance, (iii) Input Current Requirement (iv) Slew Rate Limiting Frequency (v) Maximum output voltage swing (vi) Maximum Input Voltage swing (vii) Output Impedance (viii) Output current Capability (ix) Minimum value of Load resistance (x) Bandwidth*

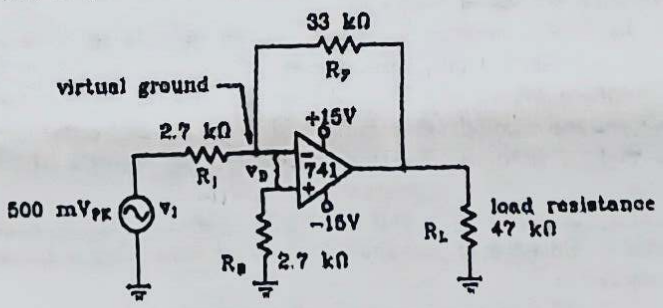


Fig. 5

Take standard parameters of OP AMP IC 741 for analysis. Consider Saturation voltage as ±2V of supply voltage. If load resistance is reduced from 47kΩ to 2.7kΩ, shall there be change in input resistance, justify your sresponse.

(b) Classify amplifiers based on input and output quantities and show that a circuit of Fig. 6 is a case of series feedback amplifier. Calculate input resistance, output resistance, amplifier's gain and bandwidth for amplifier shown in Fig. 6, if $A = 2\times10^5$ and $R_f = 20k,\ and\ R_1 = 10k$. 05

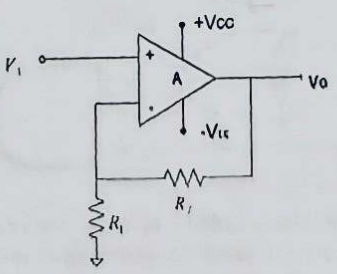


Fig. 6.

Q.3(a) Explain the working of Schmitt Trigger circuit. A Schmitt trigger circuit is designed to have hysteresis window $V_H = 0.2\,volts$, and feedback gain $\beta = 0.01$. Determine voltage $V_R$, $UTP$, and $LTP$, if reference voltage '$V_R$' is half of the saturation voltage $V_{Sat}$. 05

| | | |
|---|---|---|
| (b) | Give the block diagram of 555 timer and discuss its working as Astable and Monostable Multivibrator.<br><br>**OR**<br><br>Discuss the working principle of OP-Amp based Astable and Mono-stable Multivibrator. | 05 |
| Q. 4(a) | In certain application, four inputs ***A, B, C, D*** (*both true and complement forms available*) are fed to logic circuit, producing an output ***F*** which operates a relay. The relay turns on when ***F(ABCD) =1*** for the following states of the inputs ***(ABCD): 0000, 0010, 0101, 0110, 1101, and 1110***. Two states i.e. 1000 and 1001 do not occur, and for the remaining states, the relay is **OFF**. Minimize ***F*** with the help of a Karnaugh map and realize it using a minimum number of *3- input NAND gates.* | 05 |
| (b) | Discuss the function table of BCD to seven-segment decoder for BCD numbers 0 to 9. Design a logic circuit that can display output of BCD to seven-segment decoder for decimal digits 2, 4, and 9, and turning the display OFF (*Don't Care Condition*) for other valid BCD digits in the schematic shown in Fig.7 below.<br><br> 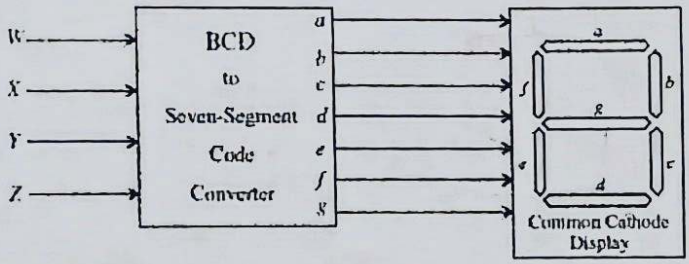 <br><br>Fig. 7<br><br>**OR**<br><br>A lab experiment on BCD counter and seven segment display using IC 7490 and 7447 have been performed by you. Draw the waveforms that represent BCD numbers 0-9, and discuss BCD to decimal decoder with appropriate logic diagram. Also derive the truth table as required to design a BCD to 7 segment decoders. | 05 |
| Q.5(a) | The Fig. 8 shown below has Analog to Digital Converter (ADC) that monitors voltage output of a 12V battery in a residential solar PV system. The ADC has 4-bit binary output ABCD (Bit A is the MSB) as depicted in truth table below. The ADC output is connected to a logic circuit to give high output and glow connected LED if its output is greater than $(0110)_2=(6)_{10}$ (*indicating that the battery voltage is greater than 6V*). Use 4:16 Decoder circuit to implement the logic.<br><br> 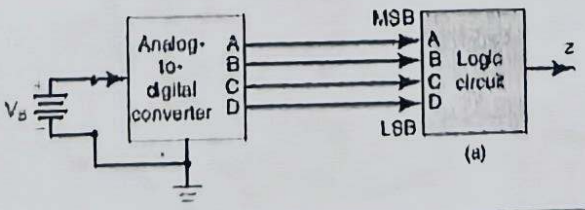 <br><br><br>| | A | B | C | D | z |<br>\|---\|---\|---\|---\|---\|---\|<br>\| (0) \| 0 \| 0 \| 0 \| 0 \| 0 \|<br>\| (1) \| 0 \| 0 \| 0 \| 1 \| 0 \|<br>\| (2) \| 0 \| 0 \| 1 \| 0 \| 0 \|<br>\| (3) \| 0 \| 0 \| 1 \| 1 \| 0 \|<br>\| (4) \| 0 \| 1 \| 0 \| 0 \| 0 \|<br>\| (5) \| 0 \| 1 \| 0 \| 1 \| 0 \|<br>\| (6) \| 0 \| 1 \| 1 \| 0 \| 0 \|<br>\| (7) \| 0 \| 1 \| 1 \| 1 \| 1 \|<br>\| (8) \| 1 \| 0 \| 0 \| 0 \| 1 \|<br>\| (9) \| 1 \| 0 \| 0 \| 1 \| 1 \|<br>\| (10) \| 1 \| 0 \| 1 \| 0 \| 1 \|<br>\| (11) \| 1 \| 0 \| 1 \| 1 \| 1 \|<br>\| (12) \| 1 \| 1 \| 0 \| 0 \| 1 \|<br>\| (13) \| 1 \| 1 \| 0 \| 1 \| 1 \|<br>\| (14) \| 1 \| 1 \| 1 \| 0 \| 1 \|<br>\| (15) \| 1 \| 1 \| 1 \| 1 \| 1 \|<br><br>Fig.8 | 05 |
| (b) | A Multiplexer circuit is used in Analog to digital (ADC) converter where 04 numbers of analogue signals are connected for conversion. Conceive and explain the circuit which can generally be used for this purpose. Use *(i)* Gates to implement the logic, *(ii)* Two numbers of 2-1 Multiplexers. | 05 |

Course Coordinator: Dr. R. K. Nema
Date of Examination: 03.05.2024